Datatypes

A Review

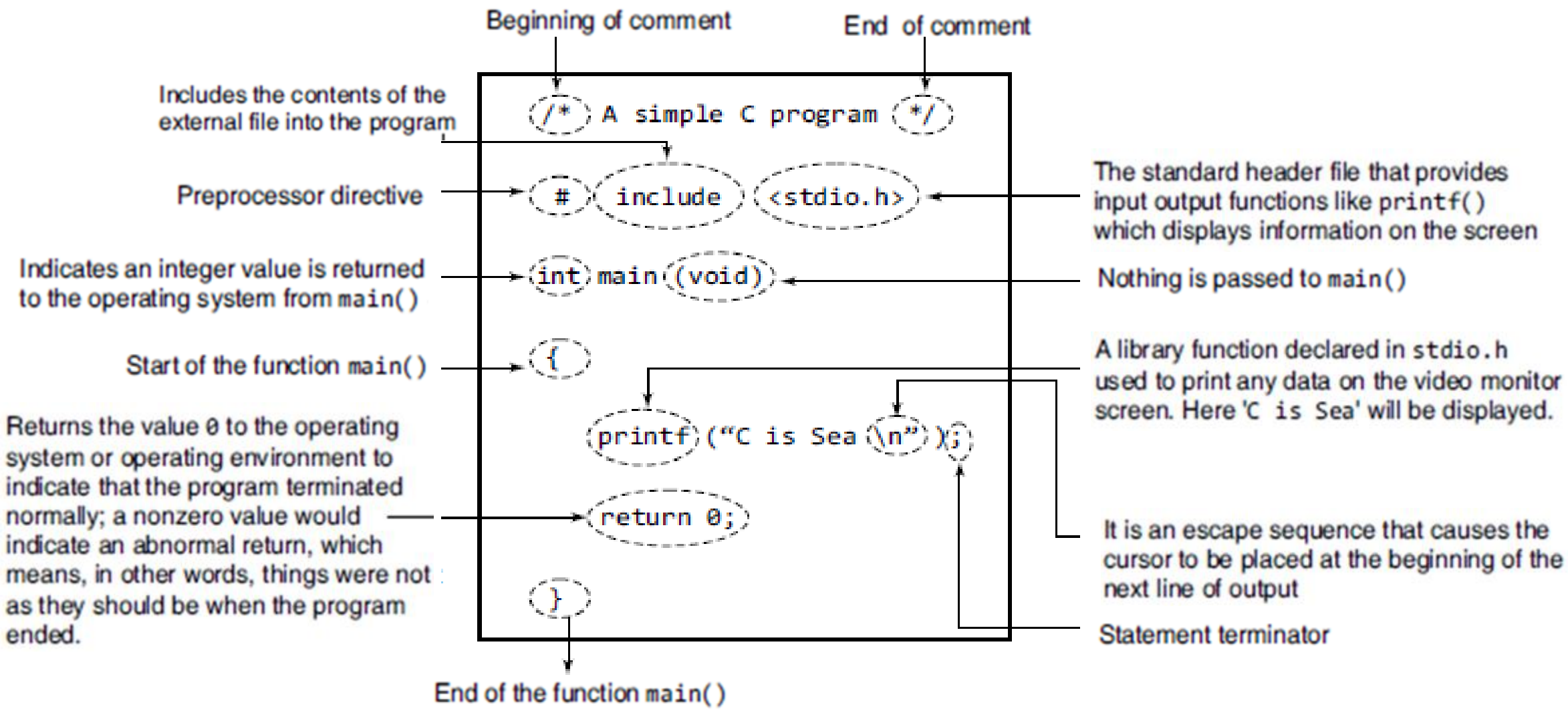
Beginning of comment
End of comment
Includes the contents of the external file into the program
/* A simple C program */
Preprocessor directive
include <stdio.h>
The standard header file that provides input output functions like printf() which displays information on the screen
Indicates an integer value is returned to the operating system from main()
int main (void)
Nothing is passed to main()
Start of the function main()
{
A library function declared in stdio.h used to print any data on the video monitor screen. Here 'C is Sea' will be displayed.
printf ("C is Sea \n");
Returns the value 0 to the operating system or operating environment to indicate that the program terminated normally; a nonzero value would indicate an abnormal return, which means, in other words, things were not as they should be when the program ended.
return 0;
It is an escape sequence that causes the cursor to be placed at the beginning of the next line of output
}
Statement terminator
End of the function main()

Including files in C program

- Each header file contains one or more function declarations, data type definitions, and macros.

1. #include <filename>
   - Often used to include standard headers
   - Read from the compiler's standard "include" file directory
2. #include "filename"
   - Often used to include nonstandard header files that the programmer creates for use in the program.
   - Tells the preprocessor to look for the file in the current directory first, then look for it in the predefined locations the programmer set up

Difference between preprocessor directives and program statements

1. They must begin in the first column and no spaces are allowed between # and include
2. They are not terminated by a semicolon.

int main(void)

- When a C program is executed, main() is where the action starts.
- **When all instructions of a function have been executed, the function returns control to the calling point, to which it may optionally return the results of its computations.**
- From main() function control returns to the operating system at program termination.

Watcom C/C++, IBM VisualAge C/C++, and Microsoft Visual C/C++ compilers, main() can return **`void/int`**.

MetaWare High C/C++ and EMX C/C++ , the return type of main() has to be declared as **`int`**.

Steps in Learning English

Alphabets → Words → Sentences → Paragraph

Steps in Learning C

Alphabets , digits, Special Symbols → Constants, Variables, Keywords → Instructions → Program

C character constants

A character denotes any alphabet, digit or special symbol used to represent information.

Alphabets	A, B, ….., Y, Z a, b, ……, y, z
Digits	0, 1, 2, 3, 4, 5, 6, 7, 8, 9
Special symbols	~ ‘ ! @ # % ^ & * ( ) _ - + = | \ { } [ ] : ; " ' < > , . ? /

The alphabets, numbers and special symbols when properly combined form constants, variables and keywords

- Constants: A constant is an entity that doesn't change

- Variables: A variable can be considered as a name given to the location in memory where this constant is stored. A variable is an entity that may change.

- Keywords: Keywords are the vocabulary of C. Because they are special to C, one cannot use them for variable names.

Structure of a C program

Preprocessor directives

Global declarations

```
int main (void)
{
```

Local definitions

Statements

```
return 0;
}
```

Preprocessor directives tell the preprocessor to look for special code libraries, make substitutions in the code, and in other ways prepare the code for translation into machine language

It is visible to all parts of the program

Describes the data that will be used in the function

Consists of the instructions that cause the computer to do something

Declaration/ Definition

A *declaration* announces the properties of a data object or a function. It facilitates type checking.

A *definition* actually sets aside storage space (in the case of a data object) or indicates the sequence of statements to be carried out (in the case of a function).

Declaration: Describing the type of a data object to the compiler but not allocating any space for it.

```
int a;
```

Definition :Declaration of a data object and also allocating space to hold the data object.

```
int a=5;
```

Data Object in C

- Data is stored in the form of binary digits 0 and 1 bits (typically 8 bits, 16 bits, 32 bits or, 64 bits) in the memory at physical memory locations. These locations are known as the memory address.

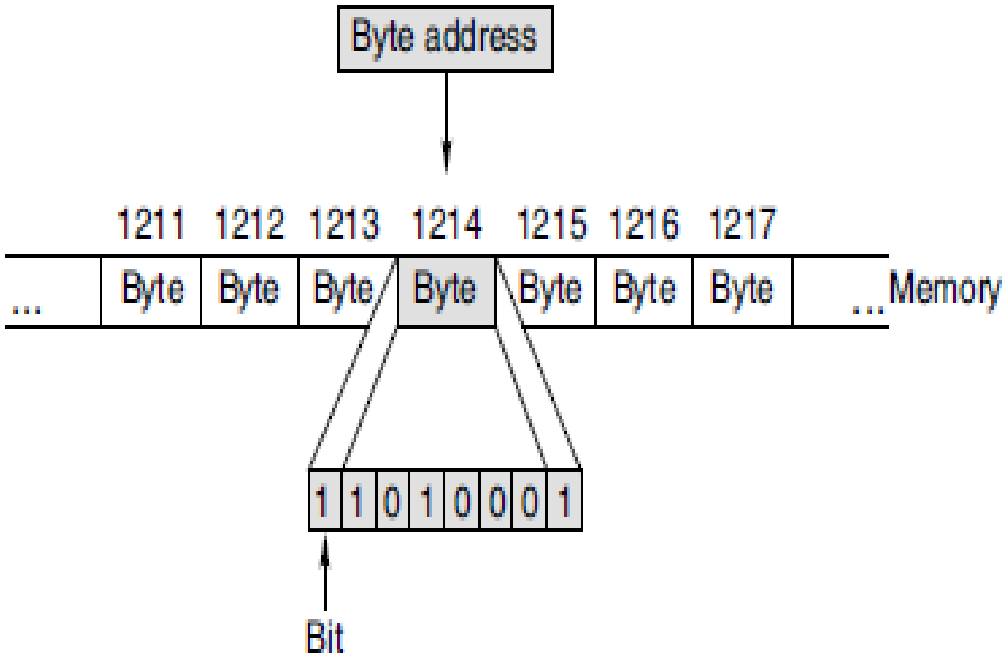

- The amount of bits on which it can operate simultaneously is known as the *word length* of the computer where 1 word= 1byte.

- A 32-bit machine can simultaneously operates on 32 bits of data.

Identifiers

- It is a sequence of characters invented by the programmer to identify or name a specific object, and the name is formed by a sequence of letters, digits, and underscores.

- In C, variables, arrays, functions, and labels are named

Variables

- A variable is an identifier for a memory location in which data can be stored and can be utilized in various computations in a program.
- Every variable is mapped to a unique memory address.

- Compiler generates an executable code which maps data entities to memory locations during compilation.

- The compiler uses the *address* of the first byte at which the variable is is allocated to refer to it.

```
int salary = 65000;
```

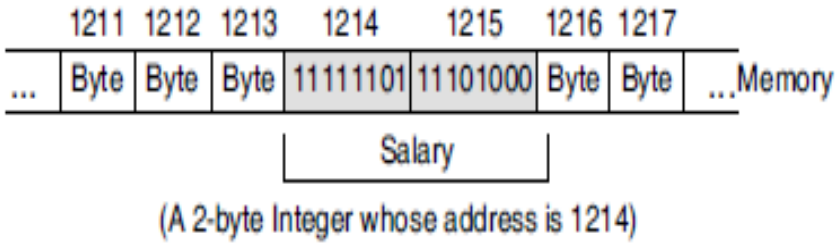

Attributes of a variable

1. Datatype

   Established when the variable is defined, e.g., integer, real, character. Once defined, the type of a C variable cannot be changed.

2. Name :

   Can be upto 31 characters in length

   Case sensitive

3. Value:
   - Can be changed by assigning a new value to the variable.
   - The kind of values a variable can assume depends on its type. For example, an integer variable can only take integer values, e.g., 2, 100, –12.

DATA TYPES IN C

- The type or data type of a variable determines the set of values that a variable might take and the set of operations that can be applied to those values.

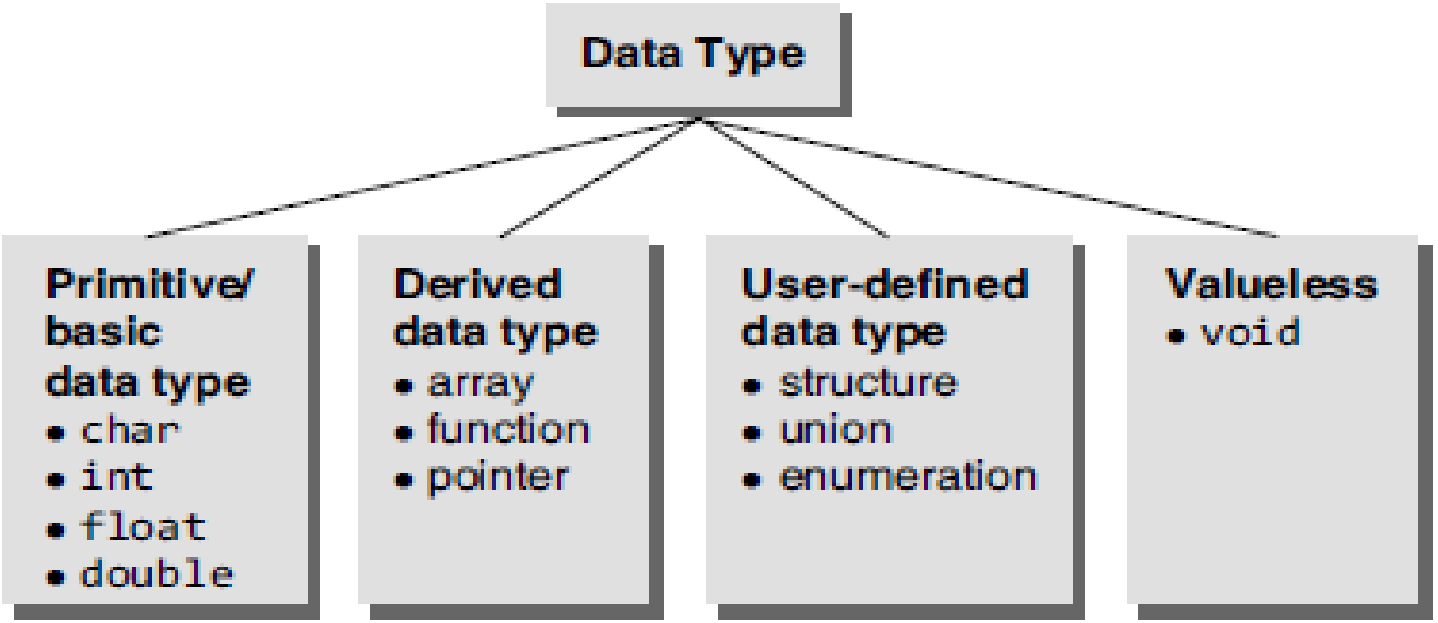

Basic Datatypes

- Character
- Integer
- Floating-point
- Double precision floating point
- Valueless

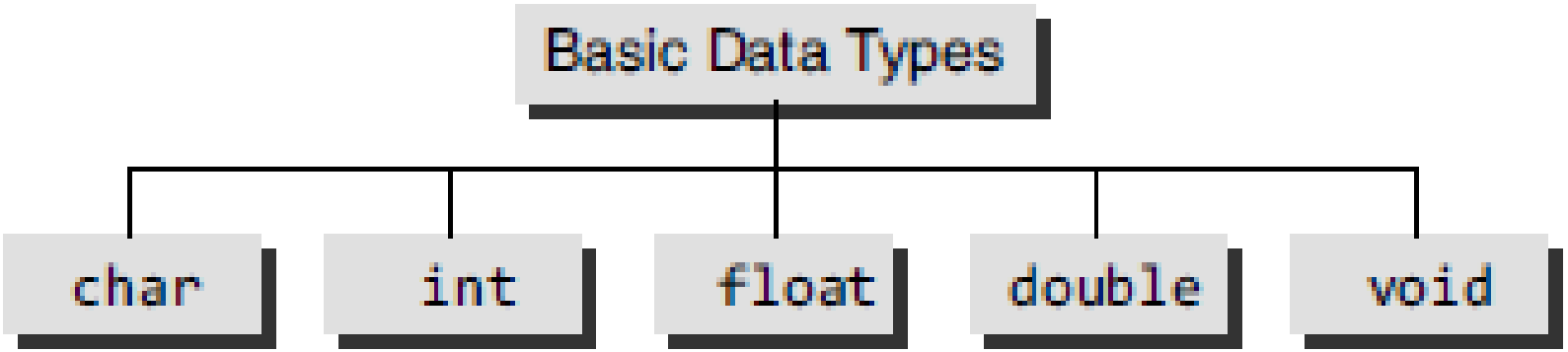

Sizes and ranges of basic data types in c for a 16-bit computer

Data type	Size (in bits)	Range
char	8	–128 to 127
int	16	–32768 to 32767
float	32	1.17549×10^{-38} to 3.40282×10^{38}
double	64	2.22507×10^{-308} to 1.79769×10^{308}
void	8	valueless

Sizes and ranges of basic data types in C for a 32-bit computer

Data type	Size (in bits)	Range
char	8	–128 to 127
int	32	–2147483648 to 2147483647
float	32	1.17549×10^{-38} to 3.40282×10^{38}
double	64	2.22507×10^{-308} to 1.79769×10^{308}
void	8	valueless

Size specifiers

- The *size qualifiers* alter the size of the basic data types.
- int: short and long (short <= int <= long)
- Float: long
- Short int tells the C compiler that the particular variable being declared is used to store fairly small integer values.

***Sign specifiers*—signed and unsigned**

- **used only with the basic data types int and char.**

	16-bit machine	32-bit machine	64-bit machine
short int	2	2	2
int	2	4	4
long int	4	4	8

Allowed combinations of basic data types and modifiers in C for a 16-bit computer

Data type	Size (bits)	Range	Default type
`char`	8	–128 to 127	`signed char`
`unsigned char`	8	0 to 255	None
`signed char`	8	–128 to 127	`char`
`int`	16	–32768 to 32767	`signed int`
`unsigned int`	16	0 to 65535	`unsigned`
`signed int`	16	–32768 to 32767	`int`
`short int`	16	–32768 to 32767	`short`, `signed short`, `signed short int`
`unsigned short int`	16	0 to 65535	`unsigned short`
`signed short int`	16	–32768 to 32767	`short`, `signed short`, `short int`
`long int`	32	–2147483648 to 2147483647	`long`, `signed long`, `signed long int`
`unsigned long int`	32	0 to 4294967295	`unsigned long`
`signed long int`	32	–2147483648 to 2147483647	`long int`, `signed long`, `long`
`float`	32	3.4E–38 to 3.4E+38	None
`double`	64	1.7E–308 to 1.7E+308	None
`long double`	80	3.4E–4932 to 1.1E+4932	None

Integer/ Real Number

type `int` format

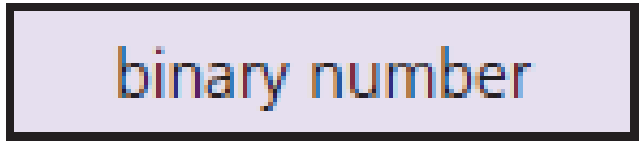

type `double` format